**COMP 36212**

Two hours

**UNIVERSITY OF MANCHESTER**
**SCHOOL OF COMPUTER SCIENCE**

Advanced Algorithms 2

Date: Tuesday 29th May 2018

Time: 14:00 - 16:00

---

**Please answer all Questions.**

**Use a SEPARATE answerbook for each SECTION**



---

This is a CLOSED book examination

The use of electronic calculators is permitted provided they are not programmable and do not store text

**[PTO]**

## Section A

This section contains one question (Question 1).

Answer ALL sub-questions.

1. Question 1 (35 marks)

Consider a physical system consisting of a mass $m$ attached to a spring with the elasticity constant $k > 0$ and a damper with the damping constant $\mu > 0$, as depicted in the figure. The state variables of this system are the displacement from the equilibrium $x(t)$ and the current velocity $v(t)$. The spring obeys Hooke's law implying that the restoring force is $-kx$. The damping (frictional) force is proportional to the velocity, i.e. $-\mu v$.

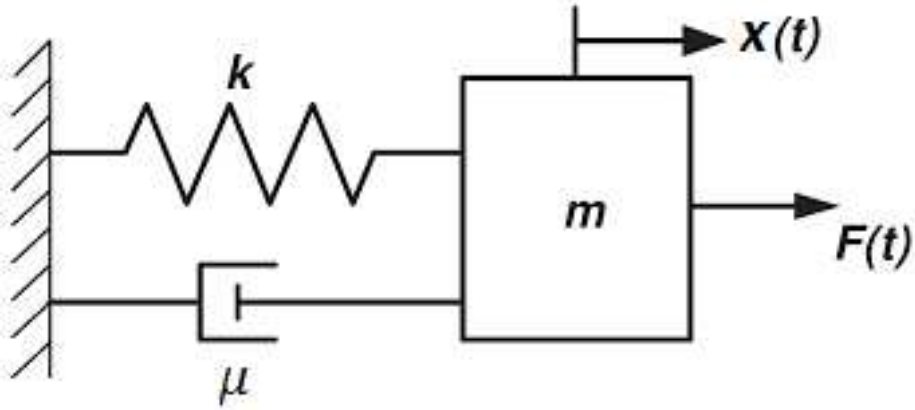


The force balance equation for this system is then

$$F = ma = -kx - \mu v. \tag{1}$$

Using the relations $v = \frac{dx}{dt}$ and $a = \frac{dv}{dt}$, equation (1) can be rewritten as a system of two initial value problems

$$\frac{dx}{dt} = v, \tag{2}$$

$$\frac{dv}{dt} = \frac{1}{m}(-kx - \mu v). \tag{3}$$

At $t = 0$ we assume the following initial conditions

$$x(0) = 0, \quad v(0) = 1. \tag{4}$$

a) Consider the forward Euler method for the numerical solution of initial value problems $y' = f(t,y)$, with $y(0) = y_0$:

$$\frac{y_{n+1} - y_n}{\Delta t} = f(t_n, y_n), \quad n = 0, 1, \ldots. \tag{5}$$

When (5) is applied to (3), the method reads:

$$v_{n+1} = v_n - \frac{\Delta t}{m}(kx_n + \mu v_n)\,. \tag{6}$$

Assume $m = k = \mu = 1$, which simplifies equation (6) to:

$$v_{n+1} = v_n - \Delta t(x_n + v_n)\,. \tag{7}$$

The data required to compute $v_{n+1}$ in (7) is given in the **decimal** system with four significant digits:

$$x_n = 0.1002\,, \quad v_n = 0.1000\,, \quad \Delta t = 0.5000\,. \tag{8}$$

Calculate the number of significant digits $\delta$ that are lost during the computation of $v_{n+1}$ by (7) using the numerical values (8). (10 marks)

b) Consider the following linear multi-step method for the solution of initial value problems $y' = f(t,y)$, with $y(0) = y_0$:

$$y_{n+2} - y_{n+1} = \frac{\Delta t}{2}(3f_{n+1} - f_n)\,. \tag{9}$$

i. Determine the order of the method. Is the method consistent? (5 marks)

ii. Consider the application of method (9) to the problem (2)–(3). The initial values (4) are given with three decimal places as $x(0) = 0.000$ and $v(0) = 1.000$, the step size is $\Delta t = 0.1$, and assume, for simplicity, $m = k = \mu = 1$. Compute the approximate solutions $x_2$ and $v_2$ using (9) with three decimal places. (Hint: The method (9) is not self-starting. Thus, the values $x_1$ and $v_1$ are required to start the method. You should compute these using the forward Euler method (5). All the intermediate computations should be done with three decimal places by rounding off the intermediate results.) (10 marks)

c) i. Determine the equilibrium point $(x_e, v_e)$ of the system (2)–(3) by solving the equations $\frac{dx}{dt} = 0$ and $\frac{dv}{dt} = 0$. (3 marks)

ii. Examine the stability of the system at the equilibrium point $(x_e, v_e)$ determined in the previous part using the eigenvalues of the Jacobian matrix calculated at that point. (7 marks)

## Section B

This section contains one question (Question 2).

Answer ALL sub-questions.

2. Question 2 (35 marks)

The academic community is cliquish, and the proof of this is the pattern that scientific collaboration follows. Imagine a co-authorship network of collaborations built by using data from bibliographic databases of papers published in an area of research, where the nodes are authors, and two authors are connected by a link if they have co-authored one or more papers. This is an example of a real-world complex network. In this network, suppose that there are a few authors with many links, and most of the other authors with only a few links. That is, there is a large number of authors with a low node degree (for example, PhD students), and a relatively small number of authors that have a high node degree (mainly, professors who act as hubs). The more papers an author has published with co-authors, the more likely it is that this author will gain a new link. Moreover, in our specific network, we only need to remove a few authors with high node degrees to break the connection between others and divide the network into disconnected parts.

a) Amongst the models that we have studied, what is the network model that best captures the structure of the co-authorship network described above?

Explain the general properties and the basic topological properties of this type of network model. Describe the basic topological properties related to the size, density and connectivity of this network and the corresponding measures for these properties. Explain the meaning of these properties in the context of this co-authorship network. (15 marks)

b) Name the basic algorithm and the two main extended versions of the basic algorithm to generate the type of complex network model introduced in 2.a). Explain briefly the key parts of the basic algorithm that can produce the co-authorship network described above.

(5 marks)

c) Explain clearly the steps and the calculations required at each step of one of the two extended versions of the basic algorithm identified in 2.b). (15 marks)



**END OF EXAMINATION**